Power supply unit - QUINT-PS-100-240AC/24DC/ 5

2938581

https://www.phoenixcontact.com/za/products/2938581

Please be informed that the data shown in this PDF document is generated from our Online Catalog. Please find the complete data in the user documentation. Our General Terms of Use for Downloads are valid.

DIN rail power supply unit 24 V DC/5 A, primary-switched, 1-phase.
Please use the following item in new systems: 2904600

Product Description

QUINT POWER power supply units for plant and special engineering reliably start heavy loads with high inrush currents using the POWER BOOST. Thanks to the wide-range input and extensive package of approvals, they can be used in all sectors of industry the world over. The switching output or floating relay contact are used for remote diagnostics.

Commercial Data

Item number	2938581
Packing unit	1 pc
Minimum order quantity	1 pc
Sales Key	090
Product Key	CMPP13
Catalog Page	Page 480 (IF-2007)
GTIN	4017918890520
Weight per Piece (including packing)	1 172,6 g
Weight per Piece (excluding packing)	830 g
Customs tariff number	85044030
Country of origin	TH

Technical Data

Input data

AC operation

Nominal input voltage range	100 V AC ... 240 V AC
Input voltage range	85 V AC ... 264 V AC
	90 V DC ... 350 V DC
Input voltage range AC	85 V AC ... 264 V AC
Input voltage range DC	90 V DC ... 350 V DC
Voltage type of supply voltage	AC/DC
Inrush current	< 20 A (typical)
Inrush current integral (I^2t)	< 2.5 A^2s
AC frequency range	45 Hz ... 65 Hz
Frequency range DC	0 Hz
Mains buffering time	> 30 ms (120 V AC)
	> 130 ms (230 V AC)
Current consumption	approx. 1.6 A (120 V AC)
	approx. 0.84 A (230 V AC)
Nominal power consumption	134 W
Protective circuit	Transient surge protection; Varistor
Typical response time	< 1 s
Input fuse	5 A (slow-blow, internal)
Permissible backup fuse	B6 B10 B16
Permissible DC backup fuse	DC: Connect a suitable fuse upstream
Recommended breaker for input protection	6 A ... 16 A (Characteristics B, C, D, K)

Output data

Efficiency	> 89 %
Nominal output voltage	24 V DC ±1 %
Setting range of the output voltage (U_{Set})	22.5 V DC ... 28.5 V DC
Nominal output current (I_N)	5 A (up to 60 °C)
POWER BOOST (I_{Boost})	7.5 A
Derating	60 °C ... 70 °C (2.5%/K)
Feedback voltage resistance	35 V DC
Protection against overvoltage at the output (OVP)	≤ 35 V DC
Max. capacitive load	unlimited
Active current limitation	Approx. I_{BOOST} = 7.5 A (for short-circuit)
Control deviation	< 1 % (change in load, static 10 % ... 90 %)
	< 2 % (change in load, dynamic 10 % ... 90 %)
	< 0.1 % (change in input voltage ±10 %)
Residual ripple	< 10 mV_{PP} (with nominal values)
Output power	120 W
Peak switching voltages nominal load	< 30 mV_{PP} (20 MHz)

Maximum no-load power dissipation	< 2 W
Power loss nominal load max.	< 14 W
Rise time	< 2 ms (U_{OUT} (10 % ... 90 %))
Connection in parallel	yes, for redundancy and increased capacity
Connection in series	yes

Signal: DC OK active

Output description	U_{OUT} > 0.9 x U_N: High signal
Maximum switching voltage	≤ 24 V
Output voltage	+ 24 V DC (Signal)
Maximum inrush current	≤ 40 mA
Continuous load current	≤ 40 mA

Signal: DC OK floating

Output description	Relay contact, U_{OUT} > 0.9 x U_N: Contact closed
Maximum switching voltage	≤ 30 V AC/DC
Maximum inrush current	≤ 1 A
Continuous load current	≤ 1 A

Signal: DC OK active

Output description	U_{OUT} > 0.9 x U_N: High signal
Maximum switching voltage	≤ 24 V
Output voltage	+ 24 V DC (Signal)
Maximum inrush current	≤ 40 mA
Continuous load current	≤ 40 mA

Signal: DC OK floating

Output description	Relay contact, U_{OUT} > 0.9 x U_N: Contact closed
Maximum switching voltage	≤ 30 V AC/DC
Maximum inrush current	≤ 1 A
Continuous load current	≤ 1 A

Connection data

Input

Connection method	Pluggable screw connection
Conductor cross section solid min.	0.2 mm²
Conductor cross section solid max.	2.5 mm²
Conductor cross section flexible min.	0.2 mm²
Conductor cross section flexible max.	2.5 mm²
Conductor cross section AWG min.	24
Conductor cross section AWG max.	12
Stripping length	7 mm
Screw thread	M3
Tightening torque, min	0.5 Nm
Tightening torque max	0.6 Nm

Output

Connection method	Pluggable screw connection
Conductor cross section solid min.	0.2 mm²
Conductor cross section solid max.	2.5 mm²
Conductor cross section flexible min.	0.2 mm²
Conductor cross section flexible max.	2.5 mm²
Conductor cross section AWG min.	24
Conductor cross section AWG max.	12
Stripping length	7 mm
Screw thread	M3
Tightening torque, min	0.5 Nm
Tightening torque max	0.6 Nm

Signal

Conductor cross section solid min.	0.2 mm²
Conductor cross section solid max.	2.5 mm²
Conductor cross section flexible min.	0.2 mm²
Conductor cross section flexible max.	2.5 mm²
Conductor cross section AWG min.	24
Conductor cross section AWG max.	12
Screw thread	M3
Tightening torque, min	0.5 Nm
Tightening torque max	0.6 Nm

LED signaling

Types of signaling	LED
	Active switching output
	Relay contact
Operating voltage display	Green LED

Signal output: DC OK active

Status display	"DC OK" LED green
Note on status display	$U_{OUT} < 0.9 \times U_N$: LED flashing

Signal output: DC OK floating

Status display	"DC OK" LED green

Electrical properties

Insulation voltage input/output	4 kV AC (type test)
	2 kV AC (routine test)
Insulation voltage output / PE	500 V DC (routine test)
Insulation voltage input / PE	3.5 kV AC (type test)
	2 kV AC (routine test)

Product properties

Product type	Power supply
MTBF (IEC 61709, SN 29500)	> 500000 h

Insulation characteristics

Protection class	I (with PE connection)
Degree of pollution	2

Dimensions

Width	55 mm
Height	130 mm
Depth	125 mm

Alternative assembly

Width	122 mm
Height	130 mm
Depth	58 mm

Mounting

Assembly instructions	alignable: horizontally 0 mm, vertically 50 mm
Mounting position	horizontal DIN rail NS 35, EN 60715

Material specifications

Color	aluminium
Housing material	Metal
Type of housing	AluNox (AlMg1)

Environmental and real-life conditions

Ambient conditions

Degree of protection	IP20
Ambient temperature (operation)	-25 °C ... 70 °C (> 60 °C Derating: 2,5 %/K)
Ambient temperature (storage/transport)	-40 °C ... 85 °C
Max. permissible relative humidity (operation)	95 % (at 25 °C, non-condensing)
Shock	18 ms, 30g, in each space direction (according to IEC 60068-2-27)
Vibration (operation)	< 15 Hz, amplitude ±2.5 mm (according to IEC 60068-2-6)
	15 Hz ... 150 Hz, 2.3g, 90 min.

Standards and regulations

Standard – Limitation of mains harmonic currents	EN 61000-3-2
Standard - Electrical safety	EN 62368-1
Standard - Equipment safety	GS (tested safety)
Standard – Protection against shock currents, basic requirements for protective separation in electrical equipment	EN 62368-1
Standard – Safety extra-low voltage	EN 62368-1 (SELV)
	EN 60204 (PELV)
Standard - Safe isolation	DIN VDE 0100-410

Overvoltage category

EN 62477-1	III

Approval data

Shipbuilding approval	DNV GL (EMC A)
UL approvals	UL/C-UL Recognized UL 60950-1
	UL/C-UL listed UL 508
	UL ANSI/ISA-12.12.01 Class I, Division 2, Groups A, B, C, D (Hazardous Location)

Conformity/Approvals

SIL in accordance with IEC 61508	0

EMC data

Low Voltage Directive	Conformance with Low Voltage Directive 2014/35/EC
Electromagnetic compatibility	Conformance with EMC Directive 2014/30/EU
EMC requirements for noise emission	EN 61000-6-3
	EN 61000-6-4
EMC requirements for noise immunity	EN 61000-6-1
	EN 61000-6-2
Noise emission	EN 55011 (EN 55022)
Noise immunity	EN 61000-6-2

Electrostatic discharge

Standards/regulations	EN 61000-4-2
Housing	Level 4

Electrostatic discharge

Contact discharge	8 kV
Discharge in air	15 kV
Comments	Criterion B

Electromagnetic HF field

Standards/regulations	EN 61000-4-3

Electromagnetic HF field

Frequency range	80 MHz ... 2 GHz
Test field strength	10 V/m
Comments	Criterion A

Fast transients (burst)

Standards/regulations	EN 61000-4-4

Fast transients (burst)

Input	4 kV (level 4 - asymmetrical)
Output	2 kV (Level 3 - asymmetrical)
Signal	1 kV (Level 2 - asymmetrical)

Surge voltage load (surge)

Standards/regulations	EN 61000-4-5

Conducted interference

Standards/regulations	EN 61000-4-6

Conducted interference

I/O/S	Level 3 - asymmetrical
Frequency range	0.15 MHz ... 80 MHz
Comments	Criterion A
Voltage	10 V

Voltage dips

Standards/regulations	EN 61000-4-11

Emitted interference

Standards/regulations	EN 61000-6-3
Radio interference voltage in acc. with EN 55011	EN 55011 (EN 55022) Class B, area of application: Industry and residential
Emitted radio interference in acc. with EN 55011	EN 55011 (EN 55022) Class B, area of application: Industry and residential

Drawings

Block diagram

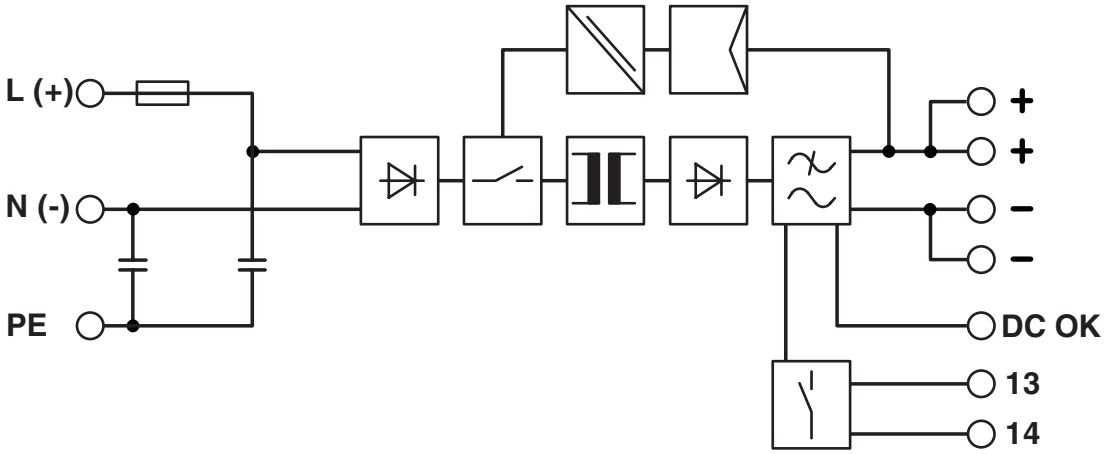

Approvals

IECEE CB Scheme

EAC

DNV GL

	Nominal Voltage U_N	Nominal Current I_N	Cross Section AWG	Cross Section mm^2
			-	-

cUL Listed

UL Listed

cULus Listed

Classifications

ECLASS

ECLASS-9.0	27040701
ECLASS-10.0.1	27040701
ECLASS-11.0	27040701

ETIM

ETIM 8.0	EC002540

UNSPSC

UNSPSC 21.0	

Environmental Product Compliance

REACh SVHC	Lead 7439-92-1

China RoHS	Environmentally Friendly Use Period = 25;
	For information on hazardous substances, refer to the manufacturer's declaration available under "Downloads"

Accessories

Type 3 surge protection device

Type 3 surge protection device - PLT-SEC-T3-230-FM-UT - 2907919

https://www.phoenixcontact.com/za/products/2907919

Type 2/3 surge protection, consisting of protective plug and base element with screw connection. For single-phase power supply network with integrated status indicator and remote signaling. Nominal voltage: 230 V AC/DC

Type 3 surge protection device

Type 3 surge protection device - PLT-SEC-T3-24-FM-UT - 2907916

https://www.phoenixcontact.com/za/products/2907916

Type 3 surge protection, consisting of protective plug and base element, with integrated status indicator and remote signaling for single-phase power supply networks. Nominal voltage: 24 V AC/DC

Mounting adapter

Mounting adapter - QUINT-PS-ADAPTERS7/1 - 2938196

https://www.phoenixcontact.com/za/products/2938196

Assembly adapter for QUINT-PS... power supply on S7-300 rail

Mounting adapter

Mounting adapter - UWA 182/52 - 2938235

https://www.phoenixcontact.com/za/products/2938235

Universal wall adapter for securely mounting the device in the event of strong vibrations. The device is screwed directly onto the mounting surface. The universal wall adapter is attached on the top/bottom.

Phoenix Contact 2022 © - all rights reserved
https://www.phoenixcontact.com

PHOENIX CONTACT (Pty) Ltd.
36 Lyn Road P.O. Box 916 ZA-Ferndale 2160

+27/11/801-8200
info@phoenixcontact.co.za